Diane
Ceiling Fan

READ AND SAVE THESE INSTRUCTIONS

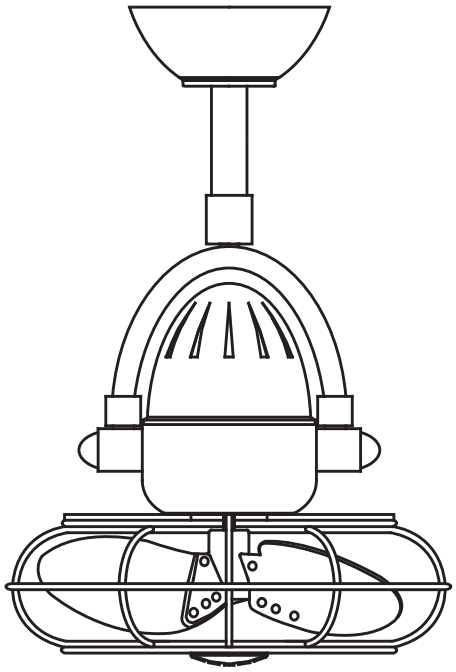

AC-MGB2

FAN RATING AC 220-240V~ 50Hz

Please do not use any electric or battery powered tools in the assembly and installation of this or any Matthews Fan Company product.

TOOLS AND MATERIALS REQUIRED

- Philips screw driver
- Standard, flat-head screw driver
- 11 mm wrench
- Step ladder
- Wire cutters

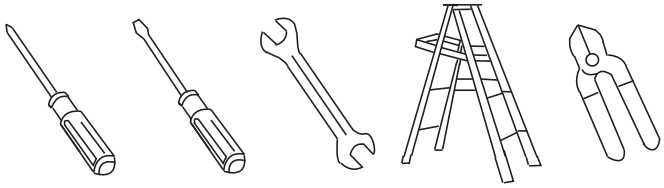

PACKAGE CONTENTS

Unpack your fan and check the contents. You should have the following items:

a. Hanger bracket assembly
b. Ball / down rod assembly
c. Fan motor assembly
d. Wall control with 2 mounting screws
e. Mounting plate with 2 mounting screws
f. Allen wrench 1/8"
g. Package hardware
   1) Mounting hardware:
   wood screws (2), screws (2),
   lock washers (2), washers (2),
   star washers (2), wire nuts (3)

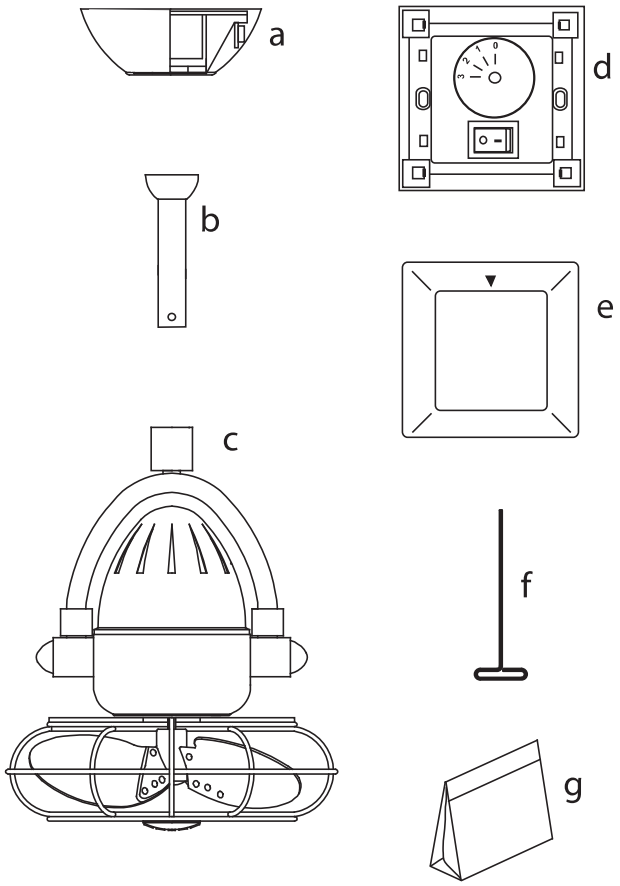

READ AND SAVE THESE SAFETY AND INSTALLATION INSTRUCTIONS.

Consult a licensed electrician if unsure of any point below mentioned.

DANGER/WARNING/CAUTION

1. High voltage and moving parts around motors and motor driven equipment can cause serious or fatal injuries. Always disconnect power source at main switch before wiring, servicing or cleaning unit. Do not rely on fan control device to prevent unexpected start-up or electrical shock. In addition, power supply must have fuses or circuit breakers for short circuit protection.

2. All electrical wiring must conform to national and local electrical codes such as: NEC, OSHA, etc.

3. Fan should be secure in its electrical grounding to avoid possible electrical shock.

4. Fan should not be used in any wet or hazardous location defined by article 500 of the NEC. In addition, its ambient temperature should not exceed 104 degrees Fahrenheit.

5. Power supply should conform to voltage rating of 220-240V.

6. Before applying power, visually re-inspect the installation. Make sure that all guards and protective devices are securely in place and all visible screws and bolts are tightened.

7. **Warning:** to reduce the risk of fire, electrical shock or personal injury, mount hanging bracket to outlet box marked "Acceptable for fan support and a hanging weight of 45 Lbs." Do not mount fan to sheet rock or drywall type materials and use only the screws provided with the outlet box.

8. **Caution:** to reduce the risk of injury to persons, install fan so that bottom edges of fan blades are to be at least 2.3m above the floor and all objects in room if safety cages are utilized. 3.3m. if safety cages are not utilized.

9. To reduce the risk of personal injury, do not bend blades or any other part of fan when cleaning. Do not insert foreign objects in between rotating fan blades or in space surrounding entire rotating fan unit. Fan must be turned off at power at supply source before installation, cleaning or servicing.

10. Instructions for Supply Connections: Conductor of a fan identified as grounded conductor to be connected to a grounded conductor of a power supply, conductor of fan identified as ungrounded conductor to be connected to an ungrounded conductor of a power supply, conductor of fan identified for equipment grounding to be connected to an equipment-grounding conductor. After making the wire connections in junction box, the splices should be turned upward and pushed carefully into the outlet box. The wires should be spread apart with the grounded conductor and the fan-grounding conductor on one side of the junction box and the ungrounded conductor on the other side of the outlet box. Be sure that all wiring connections are properly insulated from each other and any surrounding metal parts. For safety and best operating results, only qualified electrican allows to assemble and install your fan.

11. To reduce the risk of personal injury, install the supplementary mounting means and use only the hardware provided with the fan.

12. Warning: TO REDUCE THE RISKS OF FIRE, ELECTRIC SHOCK OR INJURY TO PERSONS, OBSERVE THE FOLLOWING:

A. Use this unit only in the manner intended by the manufacturer. If you have any questions, contact the manufacturer.

B. Before installing, servicing or cleaning unit, switch power off at service panel and lock service panel to prevent power from being switched on accidentally.

13. Warning: To reduce the risk of fire, electrical shock or personal injury, mount to outlet box marked acceptable for fan support and use screws provided with outlet box.

14. WARNING: This product is designed to use only those parts supplied with this product and/or accessories designated specifically for use with this product. Using parts and/or accessories not designated for use with this product could result in personal injury or property damage.

15. This appliance is not intended for use by persons (including children) with reduced physical, sensory or mental capabilities, or lack of experience and knowledge, unless they have been give supervision or instruction conceming use of the appliance by a person responsible for their safety.

16. Children should be supervised to ensure that they do not play with the appliance.

17. Fan suspension system shall be examined regularly, **at least once every two years**.

JUNCTION BOX MOUNTING OPTIONS

Your new ceiling fan will require a grounded electrical supply line of 220-240 volts AC, 50 Hz circuit. The outlet box must be securely anchored and capable of withstanding a load of at least 50 lbs.

Figures 1,2 and 3 are examples of different ways to mount the outlet box.

Note: You may need a longer down rod to maintain proper blade clearance when installing on a steep, sloped ceiling. (Fig. 3)

To hang your fan where there is an existing fixture but no ceiling joist, you may need an installation hanger bar as shown in Fig. 4.

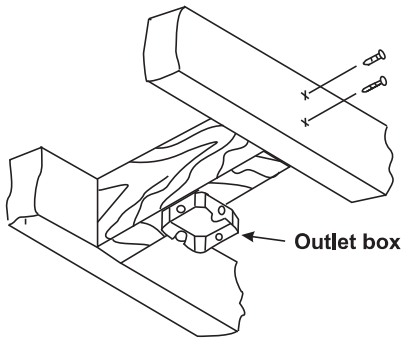

Figure 1

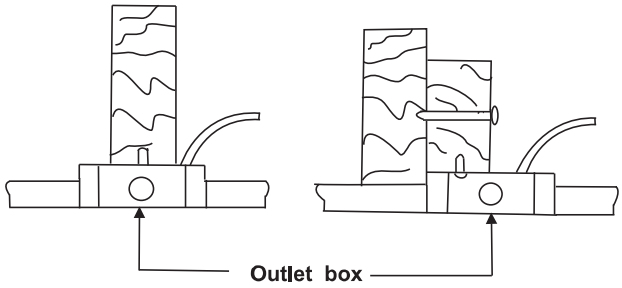

Figure 2

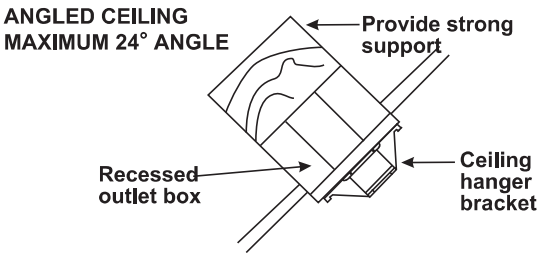

Figure 3

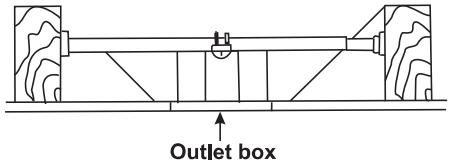

Figure 4

MOUNTING/INSTALLATION OF THE FAN

Before touching a screw driver thoroughly read these instructions.

Warning/Caution: Before installing fan, turn off power at service panel and check all visible screws and bolts for tightness.

1. Remove the decorative canopy bottom cover from the canopy by turning the cover counter clockwise. (Fig. 5)

2. Remove the hanger bracket from the canopy by removing the 1 of 2 screws from the bottom of the hanger bracket and loosening the other one a half turn from the screw head. Next, turn the canopy counter clockwise to removing the hanger bracket from the canopy. (Fig. 5)

3. Secure the hanger bracket to the ceiling outlet box using screws and washers included with your outlet box. (Fig. 6)

4. Remove hanger ball from down rod assembly by loosening set screws, removing the cross pin and sliding ball off rod. (Fig. 7)

5 A. **Metal Blades:** If your fan is one with metal blades, remove protective plastic sleeve from the motor shaft and attach the metal blades and cages now. Make sure that the set screw in the blade hub is counter-sunk into the bore hole in the shaft of the motor. Attach cage next.

5 B. **Wooden Blades:** If your fan is one with wooden blades, attach your blades as the last step in the assembly process. Do not attach them now. Attach them in step No.: 9. Handle your blades carefully otherwise you will bend the blade-irons and cause your fan to vibrate when in use.

6. Loosen the two set screws and remove the threaded pin from the top coupling of the motor assembly. (Fig. 8)

7. Carefully feed the fan wires up through the down rod. Insert the down rod into the coupling then tighten the threaded pin and two allen set screws. (Fig. 8) Carefully reinstall hanger ball onto rod being sure that cross pin is in correct position, the set screw on hanger ball is tight and wires are not twisted.

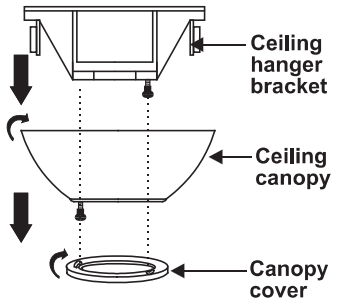

Figure 5

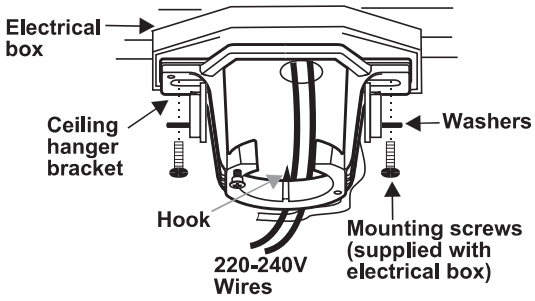

Figure 6

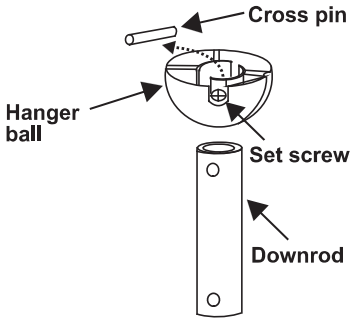

Figure 7

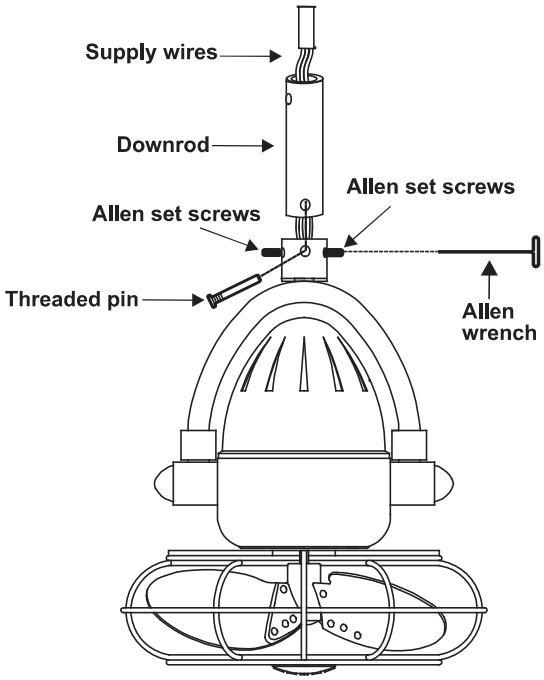

Figure 8

8. Now lift the motor assembly into position and place the hanger ball into the hanger bracket. Rotate until the "Check Tab" has dropped into the "Registration Slot" and seats firmly. The entire motor assembly should not rotate if this is done correctly.

9. Remove protective plastic sleeve from the motor shaft and attach your wooden blades. Ignore this step if you have metal blades, as they should already have been installed. Make sure that the set screw in the blade hub is counter-sunk into the bore-hole into the shaft of the motor.

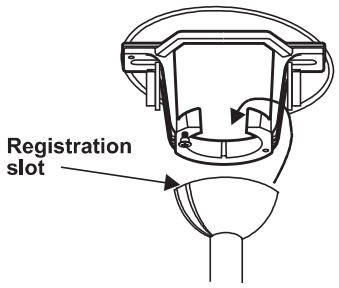

Figure 9

MAKING THE ELECTRICAL CONNECTIONS

Warning: The power should have already been disconnected. Follow the steps below to connect the fan to your household wiring. Loose the screws on the terminal block, insert the wire to each terminal block and re-tighten the screws loosened previously. Make sure there are no loose strands or connections.

1. Set knobs on the wall control in the 0 position.

2. Connect the green/ground wire from the downrod ball to the terminal block. (Fig. 10)

3. Be sure to snap together the male and female plugs. (Fig. 10A)

4. Connect the blue, neutral household neutral wire to the terminal block “N” hole. Connect the brown, hot household neutral wire to the terminal block “L” hole. Connect the black, hot household neutral wire to the terminal block “LI” hole. (Fig. 10A & 10B)

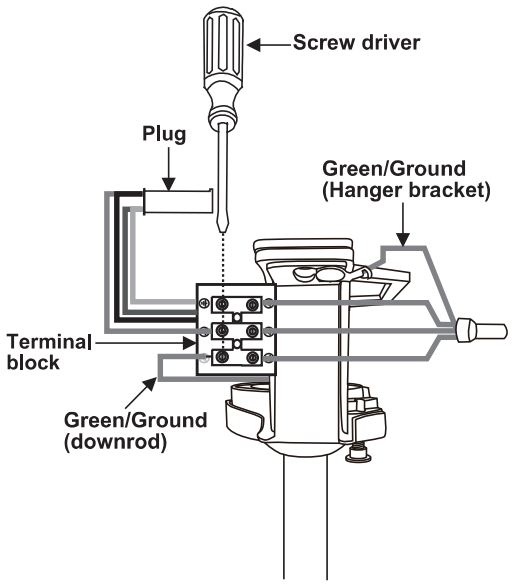

Figure 10

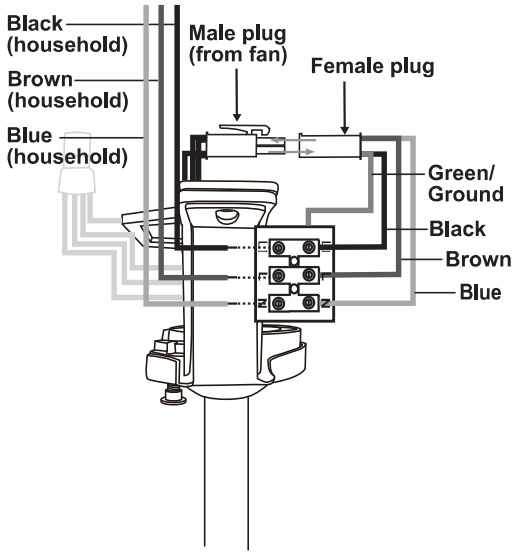

Figure 10A

5. After connecting the wires, spread them apart so that the green, ground and neutral, blue wires are on one side of the outlet box and the hot, brown and the black wires are on the other side of the outlet box.

6. Tuck connections neatly into ceiling outlet box.

7. Slide the canopy up to hanger bracket and place the key hole on the canopy over the screw on the hanger bracket, turn canopy until it locks in place at the narrow section of the key holes. Note: adjust the canopy screws as necessary until the canopy and canopy cover are snug. (Fig.11)

Warning: Make sure tab at bottom of hanger bracket is properly seated in groove of hanger ball before attaching canopy to bracket. Failure to properly seat tab in groove could cause damage to electrical wiring.

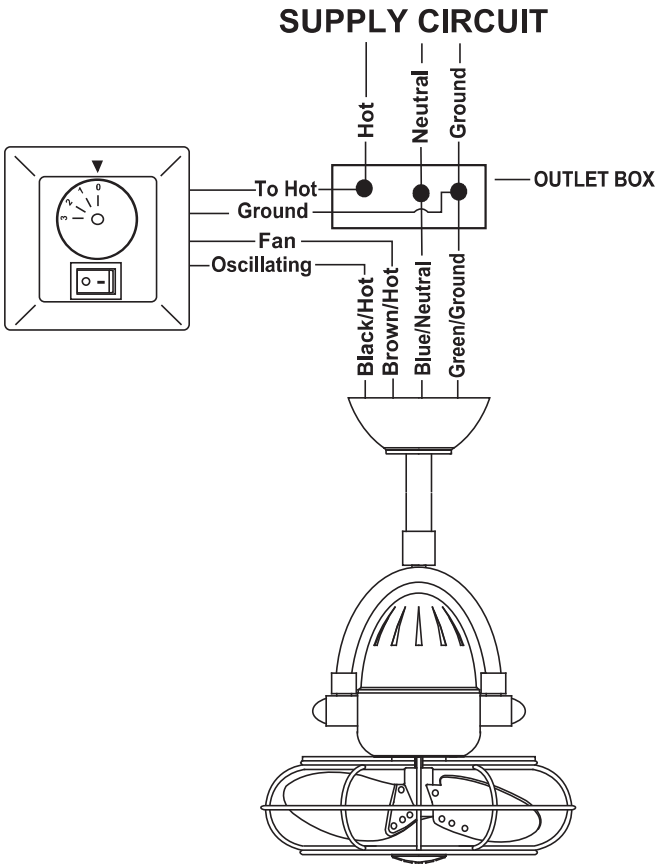

Figure 10B

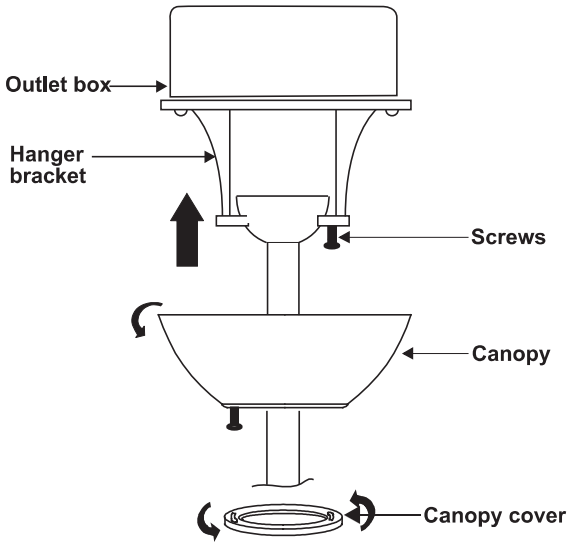

Figure 11

MOUNTING/INSTALLATION OF THE WALL CONTROL:

1. Remove the existing wall plate and switch. (Fig. 12)

2. Set knobs on the new, wall control in the "0" position.

3. Make speed control wire connections (Fig. 13). Ensure that bare wires are fully inserted into their terminals with no loose strands and that terminal screws are fully tightened.

- Hot wire from fan blades motor to wall speed control port labeled "Fan."
- Hot wire from oscillation motor to wall speed control labeled "To Light," **Note:** Perform this step if yours is a two/dual circuit installation. If this is a single circuit application, this step will be ignored and the blade motor and oscillation motor will not be operated independently.
- Hot household supply wire to wall speed control port labeled "To Hot."

4. Connect, if present, the wall speed control's ground wire directly to one of the screws from the outlet box. (Fig. 14)

5. Attach the wall control to the outlet (wall) box and secure with 2 outlet box screws. (Fig. 14)

6. Push the wall plate to the wall speed control. (Fig. 14)

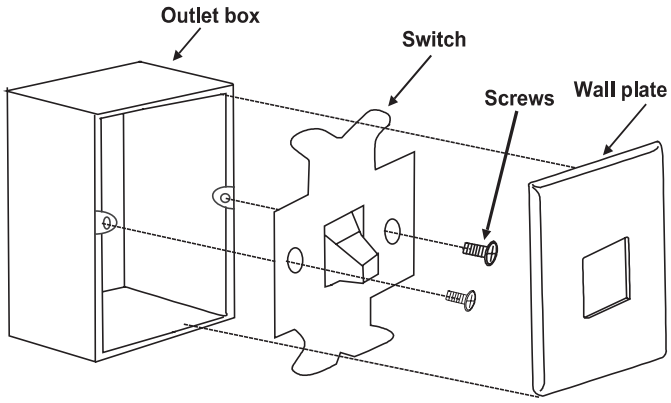

Figure 12

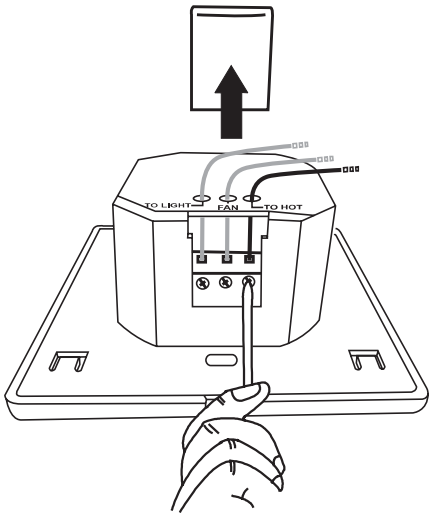

Figure 13

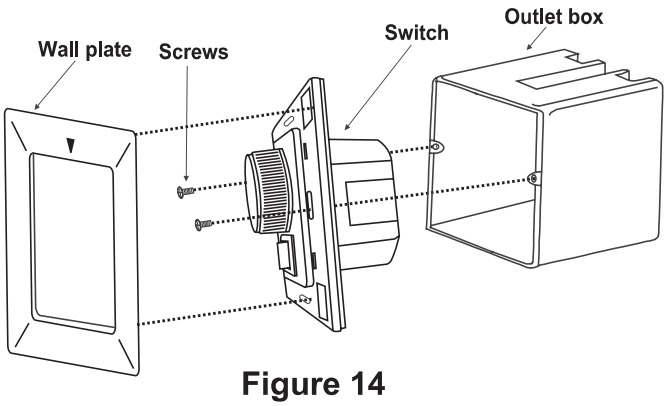

Figure 14

OPERATING THE WALL CONTROL

Restore Power to Ceiling Fan.

The fan 3-speed control knob is used to control the fan blade speed as follows:

0= Turns the fan off
1= High Speed
2= Medium Speed
3= Low Speed

B. ON-OFF Button:
This button is used to control the oscillating operation if yours is a two/dual circuit installation. Otherwise, this knob will not function.

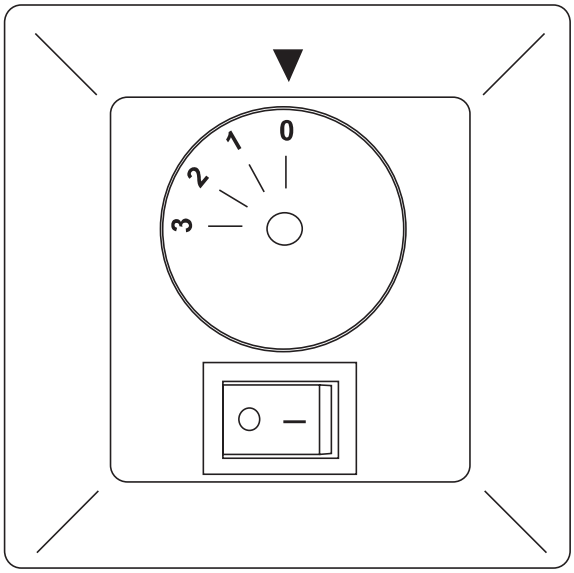

Figure 15

CARE OF AND TROUBLESHOOTING YOUR FAN

Here are some suggestions to help maintain your fan.

1. Because of the fan's natural movement some connections may become loose over time. Check the support connections, brackets and blade attachments twice a year. Make sure they are secure. It is not necessary to remove fan from the wall.

2. Clean your fan periodically to help maintain its new appearance over the years. Use only a lightly water-moistened, lint free cloth to avoid scratching the finish. Plated finishes are sealed with lacquer to minimize discoloration or tarnishing. Do not let rain or running water to come in contact with the fan. Rain or running water could damage the motor, wood blades or possibly cause an electrical shock.

3. There is no need to oil your fan. The motor has permanently lubricated bearings.

4. Fan makes a vibration noise. Check to see that all screws are tight in the fan cage connection to the motor face plate.

5. Fan actually vibrates. Uninstall and reinstall the blades. Make sure that your fan head's set screw is counter-sunk into the bore hole in the flat part of the motor shaft. Be careful that the blade brackets themselves are not bent in this process. Do not operate your fan if it continues to vibrate. Contact your Atlas Fan Co purveyor if the re-installation of the blades does not resolve the problem.

6. Fan Oscillation is irregular/not smooth. The decorative motor mount knobs are to swivel with the oscillation of the fan. This movement is important. If your oscillation is irregular and not smooth, it could be that your decorative knobs are too tight, touching the yoke and not permitting the oscillation motor to operate properly. Loosen the knobs slightly so that the knob is not touching the yoke assembly. As a rule of thumb, you should have a 1/32" clearance between the knob and yoke assembly. Do not loosen the knob too much. Doing so will cause it to fall of during operation of the fan.

Matthews Fan CO Atlas brand oscillation fans are mechanical and so, depending upon the amount of use your new fan receives and the climate in which it is installed, it may need its oscillation mechanism greased approximately every 6 months or as needed if oscillation noise occurs.

Step1.
Gingerly remove the motor back cap. Unscrew the x4 screws holding it to the frame while holding onto the front motor cap and blade/cage assembly so that it does not fall forward. After the x4 screws are removed, you may need to pull forward the front cap assembly a 1/4" to pull off the motor back cap. DO NOT MOVE THE MOTOR HEAD ASSEMBLY SIDE TO SIDE, DOING SO WILL STRIP OSCILLATION MOTOR GEARS. When the back motor cap is fully removed, replace one of the just-removed screws back into the front motor cap and frame assembly temporarily to hold the front motor cap and blade/cage in place while you grease your oscillation mechanism.

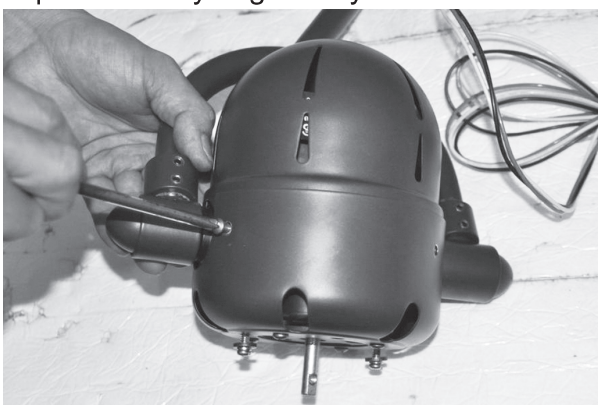

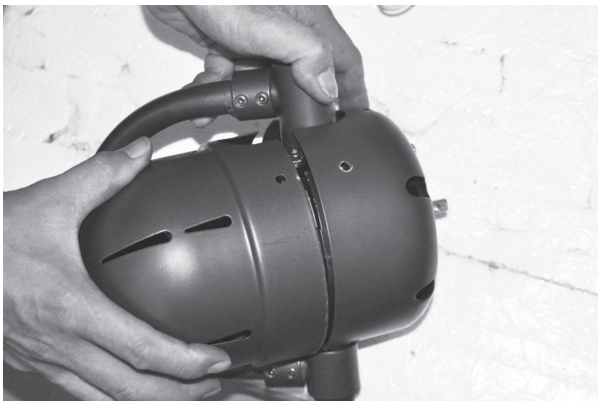

Step2.
Use a lithium based grease on all moving parts and joints of the oscillation mechanism - the push arm and cam of the oscillation motor.

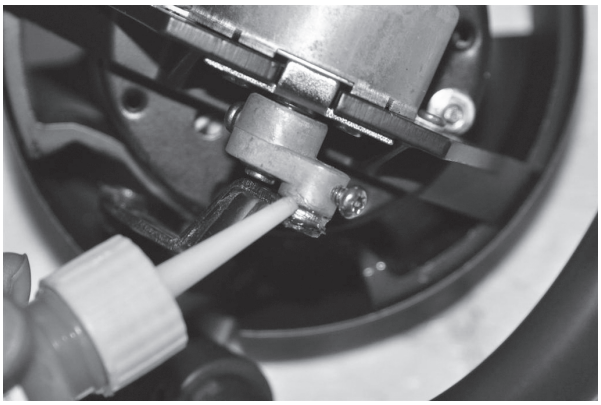

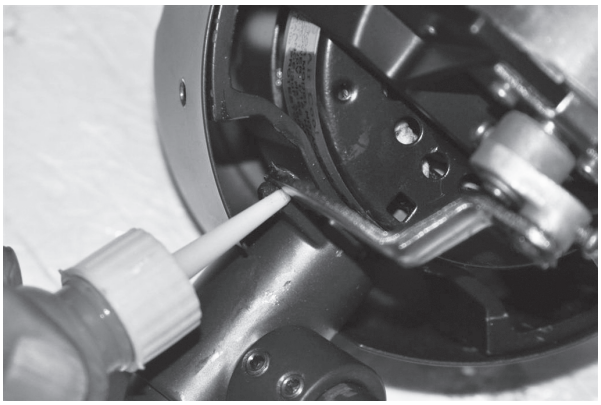

Step3.
To replace the motor back cap, hold onto the front motor cap and blade/cage assembly. Remove the temporary screw and align the screw holes between the front and back caps. Replace and tighten the x4 screws.